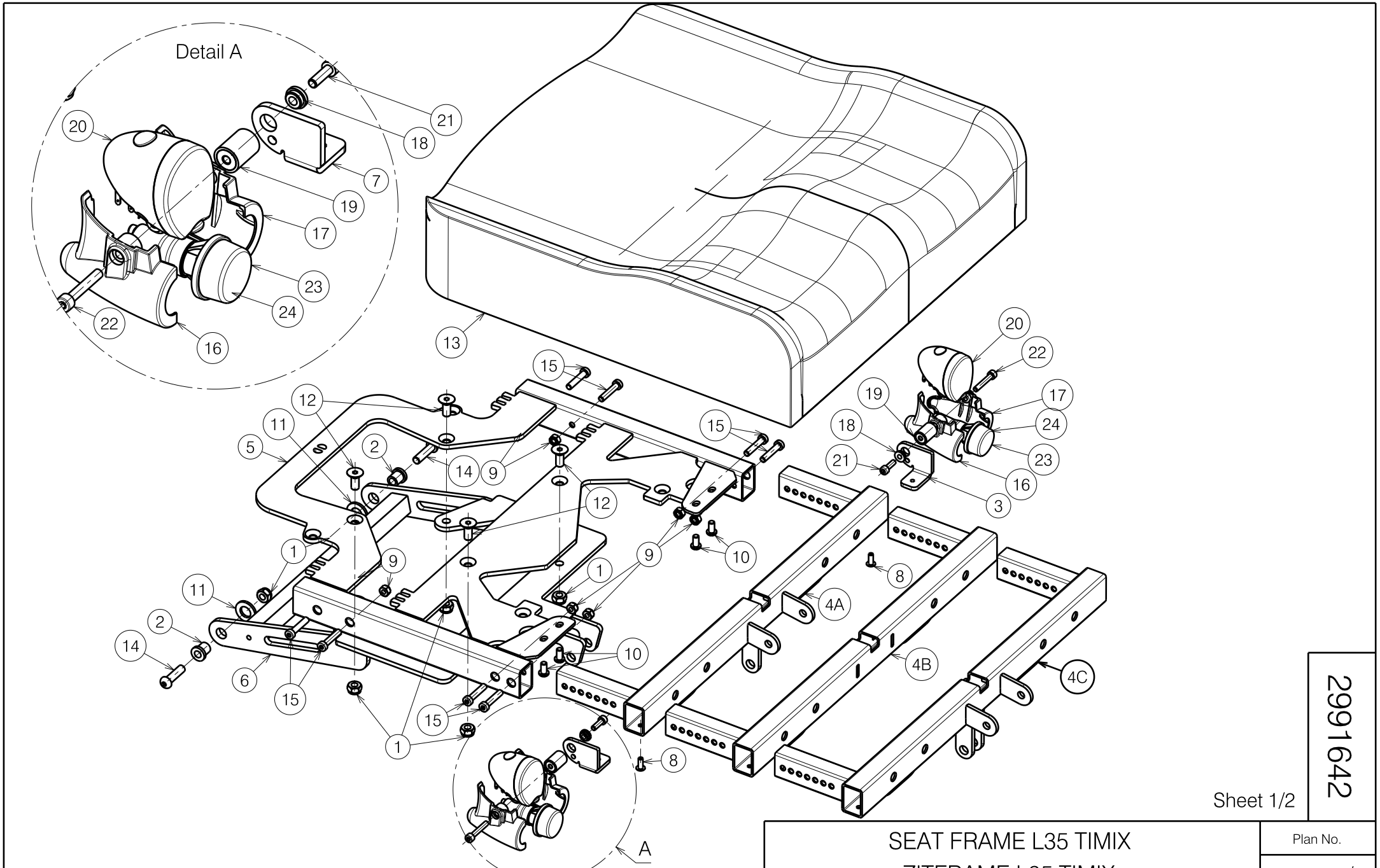

Sheet 1/2

2991642

SEAT FRAME L35 TIMIX ZITFRAME L35 TIMIX				Plan No. E000817 / J
Scale: 1:5	Drafted	Verified	Confirmed	
Date	27/06/2012	08/01/2021	08/01/2021	
Initials	SD	TT	PJ	

E000817 / J

Material							
No.	Plan	Article	Quantity	No.	Plan	Article	Quantity
1	X001016 (M8 DIN985)	1001682	6	14	M8x30	1992717	2
2	X003403	1617400	2	15	M6x30 DIN7984/8.8	1992721	8
3*	Y017859	1774554	1	16*	X004942	1997377	2
4A	Y018159	1775654 (40)	1	17*	X004943	1907376	2
	Y017927	1773954 (45)	1	18*	X004960	1907430	2
	Y018145	1775954 (50)	1	19*	X005340	1909865	2
4B	Y018411	1778354 (40)	1	20*	---	1907340	2
	Y018368	1778454 (45)	1	21*	M5x16 DIN912/8.8	1007198	1
	Y018369	1778554 (50)	1	22*	M5x30 DIN912/8.8	1903983	2
4C	Y024071	2080754 (40)	1	23*	---	1991679	2
	Y024008	2078754 (45)	1	24*	24V 3W	1991680	2
	Y024072	2080854 (50)	1				
5	Y017414	1775254 (40)	1				
	Y017984	1769754 (45)	1				
	Y017889	1776054 (50)	1				
6	Y017988	1774154	1				
7*	Y018329	1774654	1				
8*	Φ4,8x12	1001585	2				
9	M6 DIN985	1001680	8				
10	M6x12	1007000	4				
11	M12 PA6.6	1993362	2				
12	M8x20 DIN7991/8.8	1903136	4				
13	---	1908874 (40A)	1				
	---	1908868 (40B)	1				
	---	1908871 (40C)	1				
	---	1908875 (45A)	1				
	---	1908869 (45B)	1				
	---	1908872 (45C)	1				
	---	1908876 (50A)	1				
	---	1908870 (50B)	1				
	---	1908873 (50C)	1				

4A: For B10 attachment
4B: For B06, BZ7 and BZ7E attachment
4C: For BZ10 attachment
* For front lighting option with B10

A: Black skai / Bleu lining
B: Black skai / Light green lining
C: Black skai / Red lining

2991642

Sheet 2/2

SEAT FRAME L35 TIMIX ZITFRAME L35 TIMIX				Plan No.
				E000817 / J
Scale: 1:5	Drafted	Verified	Confirmed	
Date	27/06/2012	08/01/2021	08/01/2021	
Initials	SD	TT	PJ	

E000817 / J